M-12156 | 1

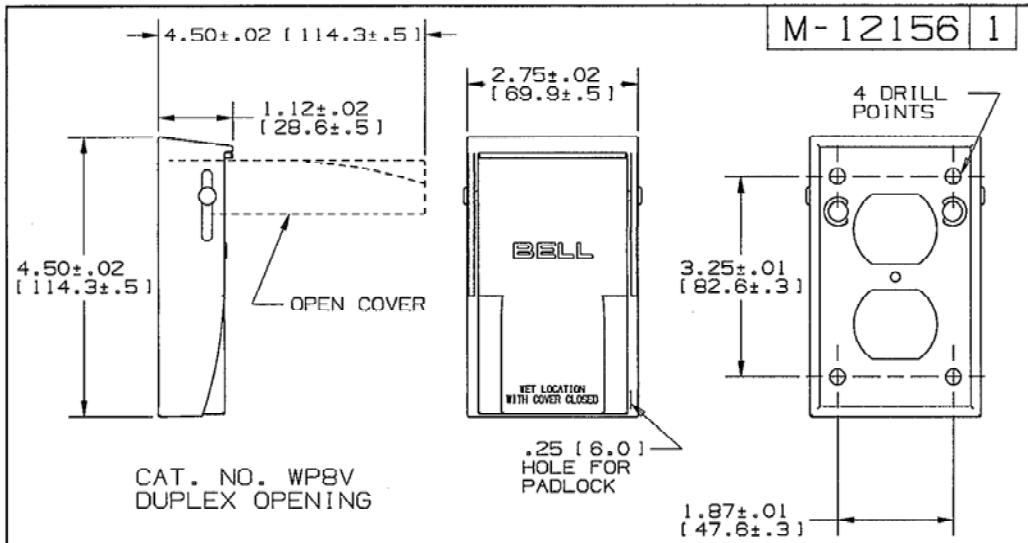

CAT. NO. WP8V
DUPLEX OPENING

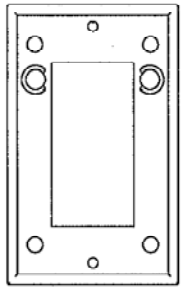

CAT. NO. WP26V
GFCI/DECORATOR SERIES OPENING

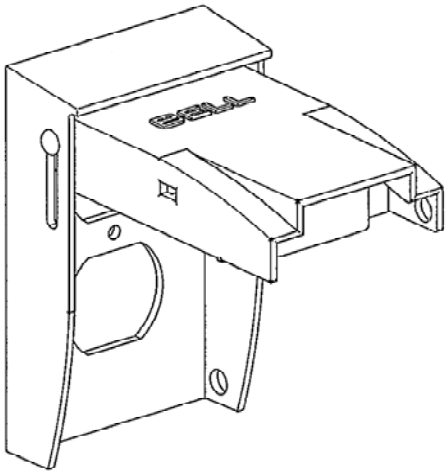

ISO VIEW

PRODUCT INCLUDES FOLLOWING ITEMS:

1. COVER ASSEMBLED TO BASE.
2. FOAM GASKET MATERIAL FOR WEATHERTITE SEAL. (NOT SHOWN)
3. ASSEMBLY HARDWARE CONSISTING OF (4) SCREWS PACKAGED IN A POLYBAG FOR DEVICE AND BOX MOUNTING.
4. PRODUCT IDENTIFICATION CARD, INCLUDES INSTALLATION INSTRUCTIONS.
5. PRODUCT COMPLETELY WRAPPED IN CELLOPHANE.
6. DIMENSIONS IN INCHES [MM].

CODE 74545

LIST OF PARTS

DESCRIPTION	MATERIAL	FINISH
WEATHERPROOF COVER	ALUMINUM	GRAY
MTG. SCREWS	STEEL	
GASKET	FOAM	BLACK

SYM	REVISIONS	APP	DATE
1	NEW RELEASE PER DCN 18606 SPN	DJP	2/13/12

THE DESIGN AND DIMENSIONS OF THE PRODUCT SHOWN ON THIS DRAWING ARE SUBJECT TO CHANGE WITHOUT NOTICE

TITLE CUSTOMER DRAWING
OUTDOOR 1G COVER
VERTICAL MOUNTING

TOLERANCES UNLESS OTHERWISE SPECIFIED
.XX = ±.01
.XXX = ±.005
ANGLES = ±2°

WIRING DEVICE-KELLEMS
HUBBELL INCORPORATED
SHELTON, CT

DR. BY SPN	APP. BY DJP
TR. BY	SCALE NONE
CHK. BY DJP	DATE 2/13/12

DIMENSION SHEET FOR CAT. NO. SEE NOTES

REPAIRABLE ☐ NON-REPAIRABLE ☐

B

M-12156

1